SIDERISE® MI mullion/transom inserts

Specialist acoustic insulation designed to reduce vertical and horizontal sound transmission in curtain wall buildings, improving the performance of hollow-framed facades and glazed areas.

Application

SIDERISE MI mullion/transom inserts comprise a range of specialist material components intended to improve the sound insulation performance of lightweight hollow framed facades or glazed areas.

Whilst the inserts may be employed for the purpose of improving the sound transmission characteristics of the building envelope (e.g. outside to inside performance), more commonly they are used to assist in reducing flanking transmission between adjacent internal areas. This includes 'room to room' and 'floor to floor' flanking sound transmission.

Specific optimal solutions have been developed for each of the common conditions encountered in curtain wall constructions. The design of the appropriate insert considers not only acoustic performance but also ease and practicality of installation.

In house manufacturing techniques such as CNC/die cutting or routing enables an accurate tailored fit within the particular hollow frame element.

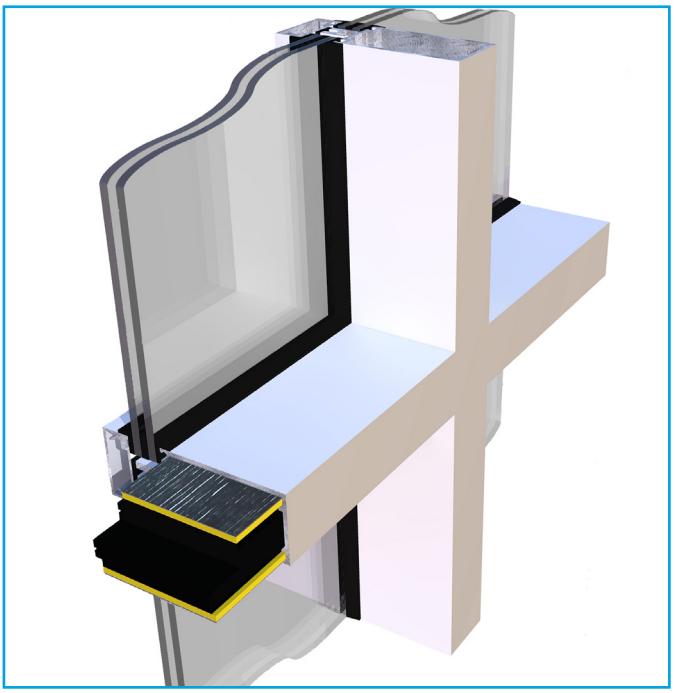

Benefits

- Ease of installation
- Wide range of base materials
- Custom dimensions and shapes
- Excellent acoustic performance

Product description

The following products form part of the **SIDERISE MI mullion/transom inserts** range for sound transmission treatment:

SIDERISE AVC closure - MI1: die-cut parts in dense resilient foam with central heavy membrane

SIDERISE MF insert - MI2: shaped resin bonded rockfibre inserts

SIDERISE V insert - MI3: shaped impregnated acoustic foam inserts

SIDERISE MF baffle - MI4: shaped resin bonded rockfibre baffles

SIDERISE V baffle - MI5: shaped impregnated acoustic foam baffles

SIDERISE HB insert - MI6: shaped composite high mass layer and acoustic foam inserts.

Figure 1. SIDERISE MI mullion/transom inserts range

ENVIRONMENTAL

SIDERISE MI mullion/transom inserts are environmentally friendly.

- They contain no Volatile Organic Compounds (VOCs) and no very Volatile Organic Compounds (vVOCs).
- Zero Ozone Depleting Potential
- Global Warming Potential of less than 5
- Recyclable

Acoustic considerations

When considering the potential for flanking sound passage via hollow frame elements within curtain walls, two main modes of transmission can apply:

1. Where the hollow section actually forms a separating element between two adjoining areas (e.g. at a mullion junction to an internal partition or a transom abutment to a raised floor / suspended ceiling). In this case the sound insulation index associated with transmission 'through' the section effectively controls achievable performance levels.

2. Where the hollow section passes from one area to another without interruption (e.g. mullions crossing an internal floor line). This offers the potential for sound to break into the hollow section in one area and then subsequently exit in the adjoining area. In this instance sound passage occurs 'along' the length of the framing component.

Remember that sound passage via hollow frame components represents just one of a number of potential mechanisms and factors that collectively form total flanking sound transmission.

Identifying the specific contribution associated with this single mode is very difficult. It is common practice to include some level of treatment as a simple precautionary measure. To ensure compliance to more demanding performance criteria increased levels of treatment may be necessary.

Achievable acoustic performance improvement levels will vary significantly based on a number of specific factors that include:

- Transmission mode
- Section material
- Section wall thickness
- Internal dimensions

Acoustic performance

The following provides a performance guide for each insert. Please contact SIDERISE for further guidance if needed.

'Along' frame treatments

SIDERISE AVC closures - MI1

Depending on the sound insulation performance required SIDERISE AVC closures may be deployed singly or in pairs. In the case of the latter, the SRI is significantly improved by spacing the closures apart. Two SIDERISE AVC closures with a 75mm separating gap achieved a 44dB Rw sound reduction index.

SIDERISE V baffle - MI5

SIDERISE V baffles, can depending on length, achieve similar performances to the SIDERISE AVC closures.

The overall improvement in final room to room performance can vary significantly depending on type of system and construction, but typically performance improvements in the region of 3-5dB can be expected.

'Through' frame treatments

SIDERISE HB insert - MI6

An empty aluminium frame section has an SRI of circa 29-31dB Rw. With the added inclusion of SIDERISE HB inserts, this would be expected to approximately increase to 40-42dB Rw. (200mm x 50mm mullion tested performance of 41dB Rw, 1/3 octave data available on request).

SIDERISE MF insert - MI2 and V insert - MI3

An empty aluminium frame section has an SRI of circa 29-31dB Rw. With the added inclusion of the SIDERISE MI2 or MI3 inserts, this would be expected to approximately increase to 34-36 dB Rw. (200mm x 50mm mullion tested performance of 35dB Rw, 1/3 octave data available on request).

Sound transmission treatments

'Through' frame

The 'Through' frame treatments involve the introduction of a continuous insert that fully fills the section's internal void. The inserts can be purely absorptive or a high mass/absorptive core composite combination.

Absorptive inserts offer modest but useful improvement levels mainly by reducing reverberation within the internal void. Mass composite versions directly improve the sound reduction index (SRI) of the frame by effectively increasing the section's wall weight. The elastomeric nature of the high mass outer membrane offers additional beneficial dampening characteristics.

Absorptive inserts are available in two main material types: resin bonded rockfibre (SIDERISE MF insert) and impregnated acoustic foam (SIDERISE V insert).

The most commonly employed mass composite product is the SIDERISE HB insert - MI6. This comprises a layer of foam with a 10kg/m^2 limp elastomeric barrier membrane to one side. The product is fitted in pairs in a back-to-back arrangement with the barrier layers to the outside. The thickness of the foam component is selected to suit the section's internal width.

One of the advantages offered by this mass/absorber composite solution is the product's flexibility and its ease of fitting. Traditional solutions such as filling with dried silica sand or inserting cut strips of rigid heavy board have significant associated drawbacks. In the case of the former, this has the potential for subsequent sand leakage or settlement. For cut boards it is the multi-layering and extreme accuracy requirement for effective friction fitting.

SIDERISE HB insert - MI6

These combined high mass / sound absorbing inserts comprise a base layer of V foam with a heavy limp membrane attached to one face. They are fitted in pairs in a back-to-back arrangement. The membrane has an outer facing of aluminum foil to reduce friction when the product is being introduced into the section.

The product can be used in both mullions and transoms and should tightly fit the full depth of the frame section.

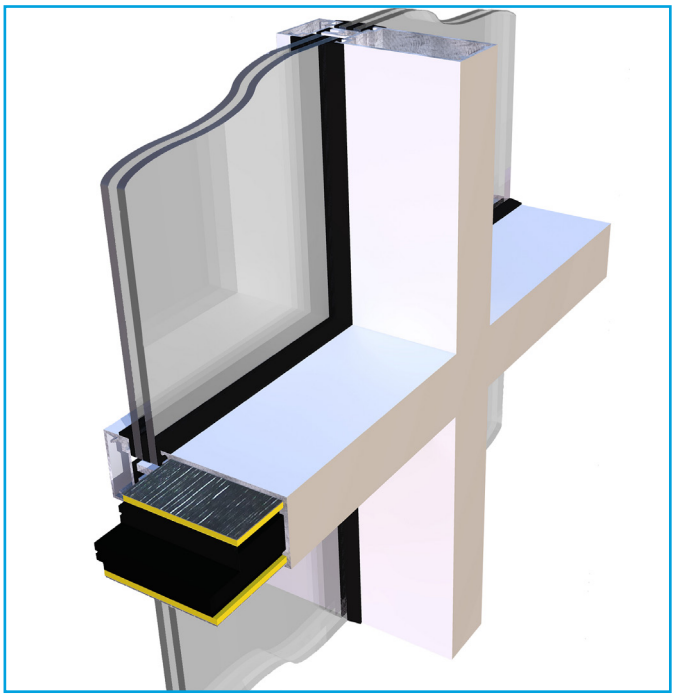

Figure 2. SIDERISE HB inserts - MI6

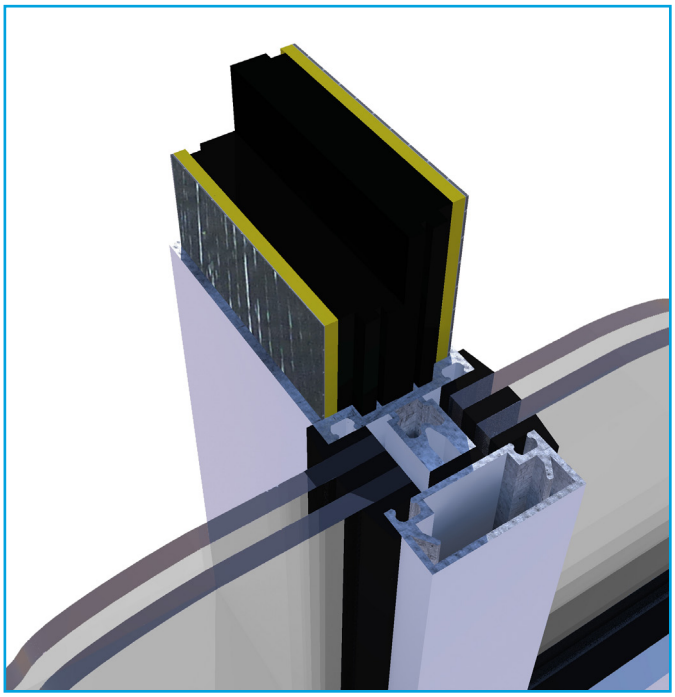

Figure 3. SIDERISE HB inserts - MI6

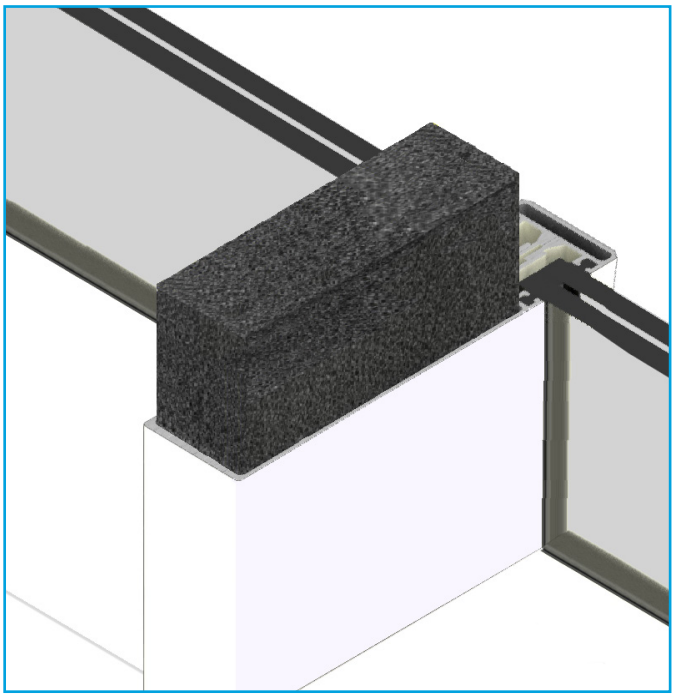

Figure 4. SIDERISE V baffle - MI5

'Along' frame

The 'Along' frame treatments generally consist of the introduction of a localised closure / baffle at the crossing point of adjacent internal areas within the building.

Similarly to treatments for 'through' frame transmission, both absorptive and mass barrier solutions are available. Please note that in the case of the absorptive version the acoustic principles employed are significantly different.

Due to their open cell internal structure, sound absorptive materials generally have poor sound insulation properties. Consequently, they are not commonly employed for this purpose. However, provided a higher density base material is used together with a substantial material depth in the sound path direction, then high SRI values can be achieved.

The advantage of incorporating a deep absorptive baffle at the crossing point is that it is less prone to performance degradation arising from a poor fit. The effects of any small gaps at the perimeter are dramatically reduced due to the long sound attenuating bypass paths created.

Mass barrier treatments in contrast are required to form a tight closure. Due to the importance of creating a perfect fit they are normally die-cut to the exact internal shape. **SIDERISE AVC closures - MI1** represent a suitable solution and can be employed for this use.

Where a very high performance is sought it is possible to combine **SIDERISE V baffles - MI5** and SIDERISE AVC closures - MI1. Typically two MI1 closures would be used with one MI5 V baffle centrally positioned between them.

The use of baffles and closures would be limited to inclusion in mullion sections as most transoms are broken at mullion lines.

Additional treatment for this type of transmission is not usually required where mullions or transoms have been continuously full filled (for the treatment of 'through' frame section transmission).

SIDERISE V baffle - MI5

The most commonly employed 'along' frame insert is the **SIDERISE V baffle - MI5**. These absorptive inserts are typically supplied in 300mm to 600mm lengths and are installed centered on the midpoint of the compartment line.

Other treatments available

'Through' frame

SIDERISE MF insert - MI2 and V insert - MI3

These absorptive inserts continuously fill the entire length of the mullion/transom. As their effect is based mainly on sound absorption properties, the inserts do not need to perfectly follow the section's internal profile. Commonly, they are supplied cut to suit the main rectangular free internal area. Both types of insert are optionally available in a profiled cut form to exactly fill the internal void..

SIDERISE MF insert - MI2 and **SIDERISE V insert - MI3** absorptive inserts are manufactured from substantially different generic base materials. As a consequence, both types may offer certain marginal advantages in some specific conditions. Generally MI3 inserts are particularly popular due to their robustness, flexibility and dust free characteristics.

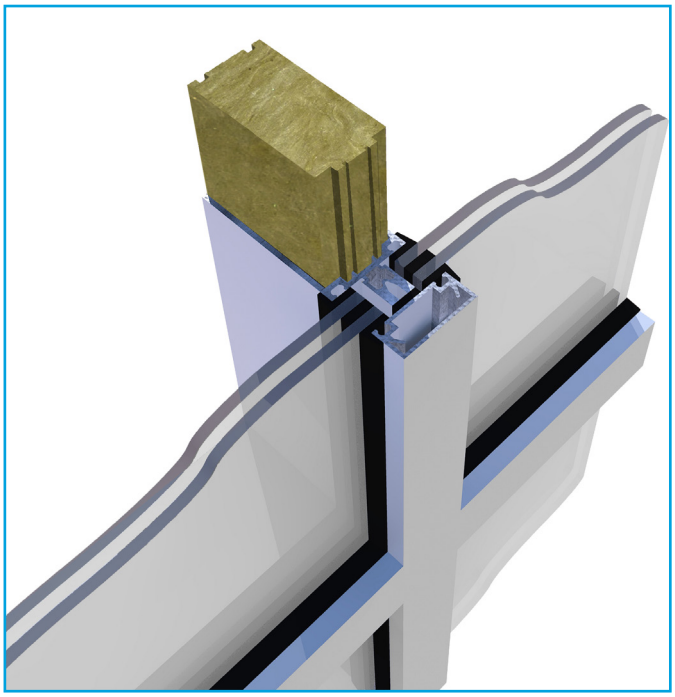

Figure 5. SIDERISE MF Inserts - MI2

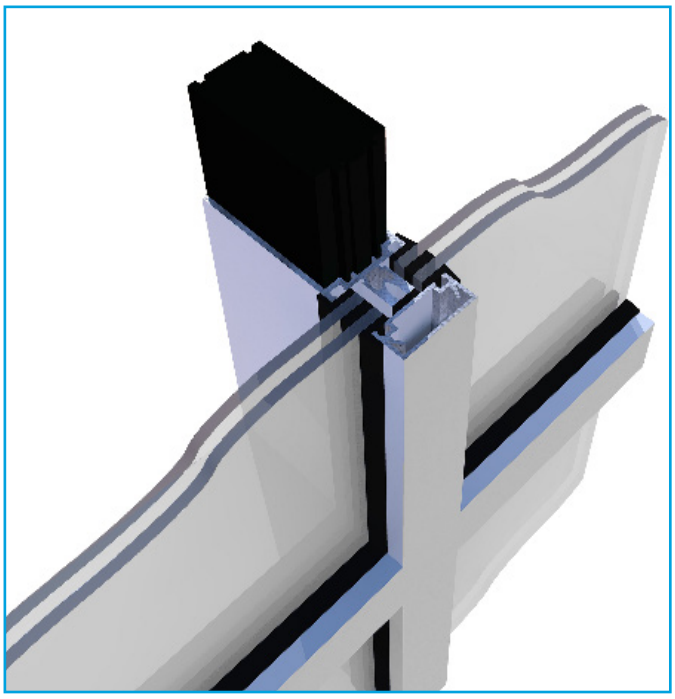

Figure 6. SIDERISE V Inserts - MI13

'Along' frame

SIDERISE AVC closures - MI1

These closures comprise a dense resilient foam material with a central flexible heavy membrane. They are die-cut to the exact internal profile of the hollow frame section.

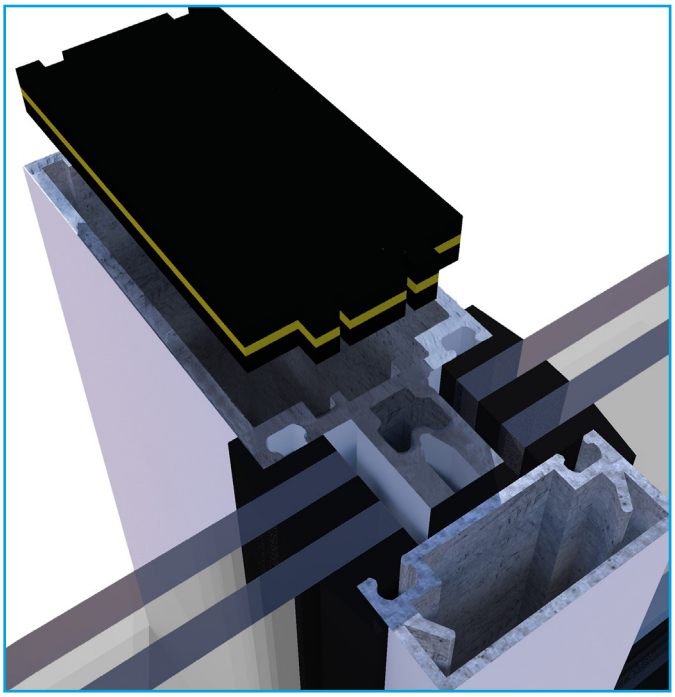

Figure 7. SIDERISE AVC Closures - MI1

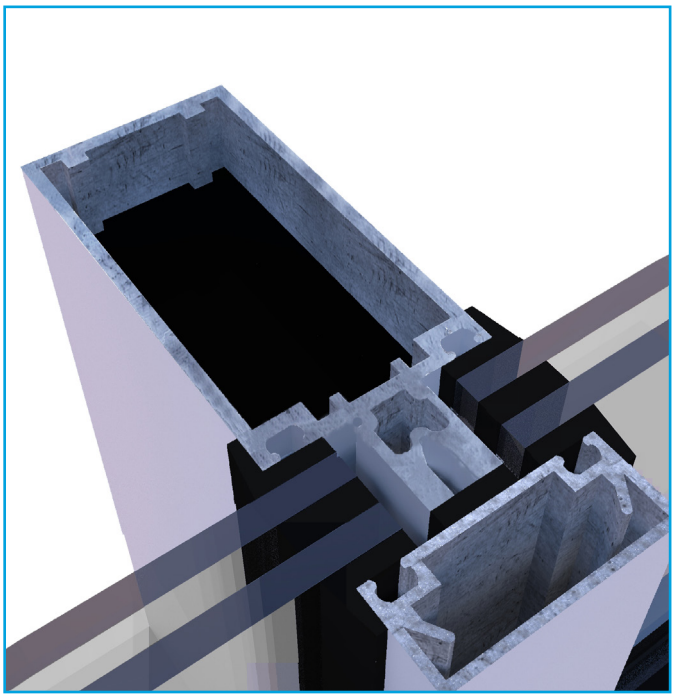

Figure 8 SIDERISE AVC Closures - MI1

Further information

PRODUCTS AVAILABLE

The following SIDERISE products are available and can also be specified using NBSPlus:

- SIDERISE MI mullion/transom inserts
- SIDERISE CW range:
    - AB & CVB/C acoustic upgradesacoustic upgrades
    - FB curtain wall fireboard
    - Perimeter barriers & fire stops
- SIDERISE FIP facade interface panel
- SIDERISE LGS linear gap seal - facades
- SIDERISE NXS firesafe spandrel insulation
- SIDERISE NXR Nexus Lamella boards
- SIDERISE 'Open State' horizontal & vertical cavity barriers for rainscreen facades
- SIDERISE BM/P5/BOAK/SA acoustic tape
- SIDERISE 'B' series brackets
- SIDERISE foil tape: FT 120/45

AVAILABLE CPDS

Contact SIDERISE for further information on our CPDs:

- SIDERISE Acoustic Products & Performance - Information for Noise Consultants
- SIDERISE Facade Acoustics
- SIDERISE Sound Tranmission in Curtain Wall Buildings
- SIDERISE Cavity Barriers in Curtain Wall Facades
- SIDERISE Cavity Barriers in Rainscreen Facades

Technical & sales support

SALES SUPPORT

Internal Sales Team
T: +44 (0) 1656 730833
E: sales@siderise.com

TECHNICAL SUPPORT

Technical Services Team
T: +44 (0) 1656 730833
E: technical@siderise.com

SIDERISE®

SIDERISE GROUP
Forge Industrial Estate,
Maesteg, UK, CF34 0AY
T: +44 (0)1656 730833
F: +44 (0)1656 812509
E: facades@siderise.com
W: **www.siderise.com**

NBSPlus NBS BIM Institute of Acoustics sponsoring organisation ASFP